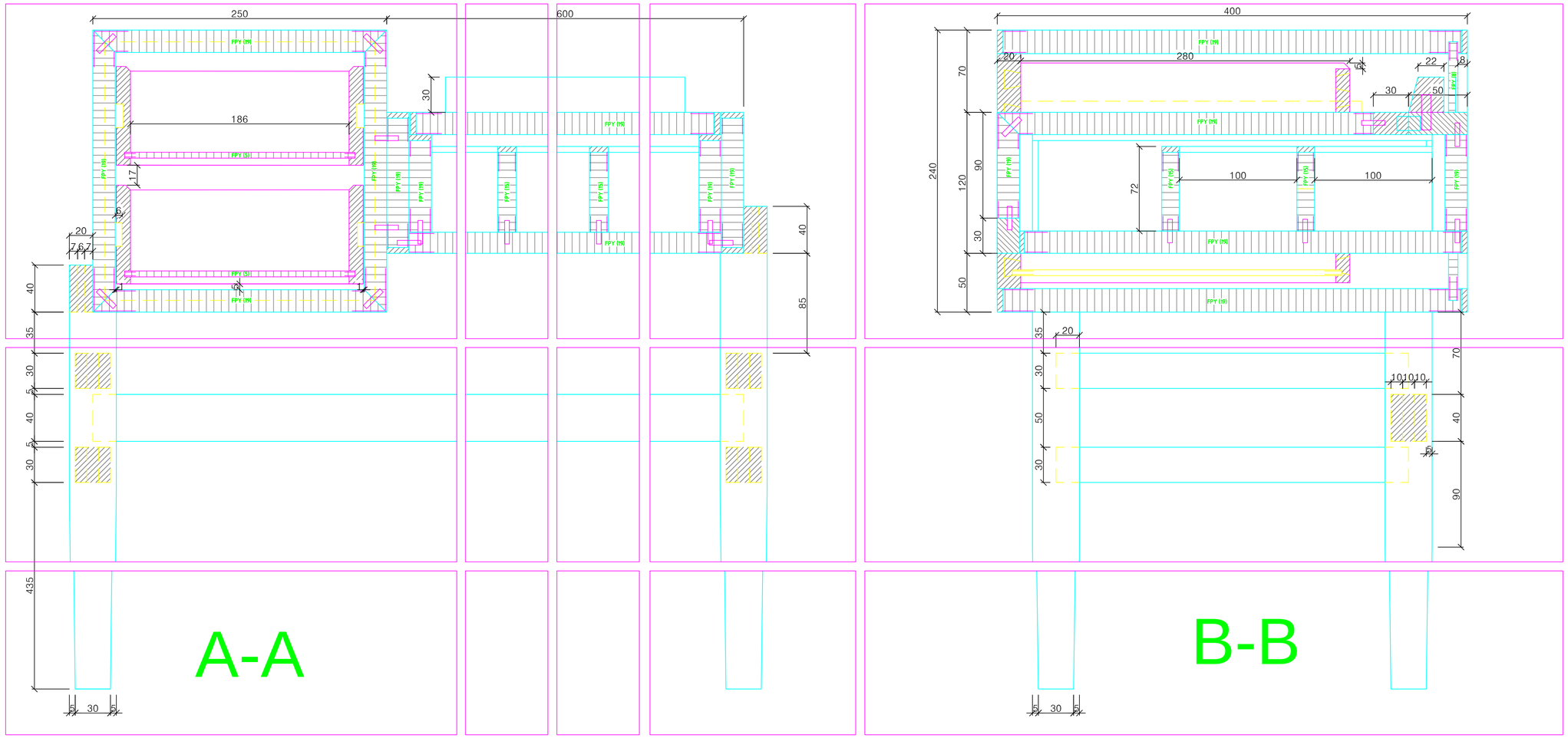

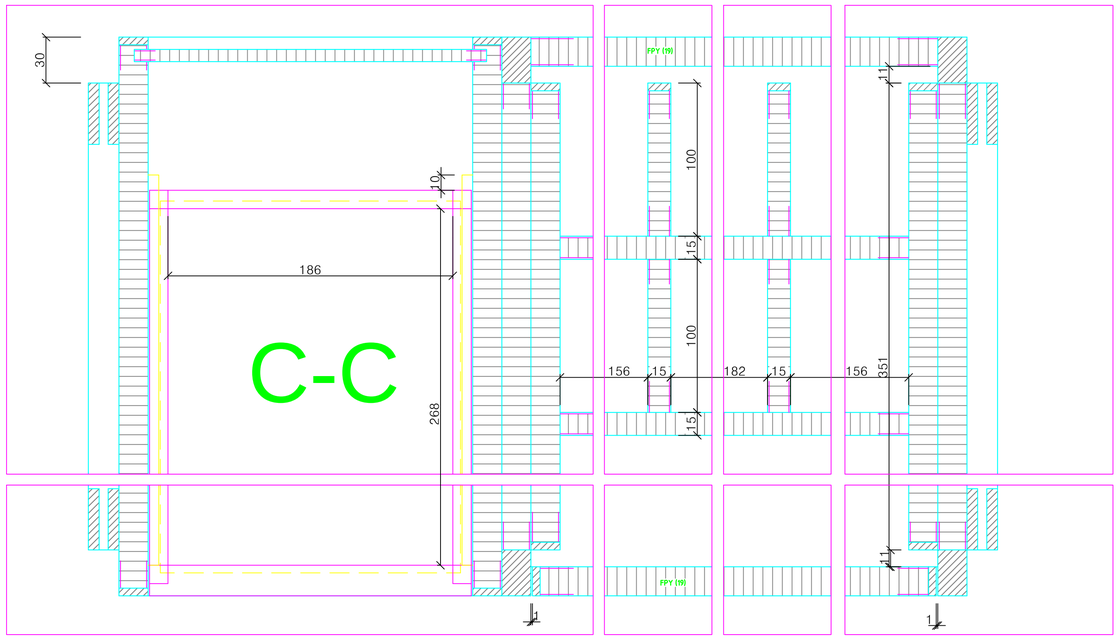

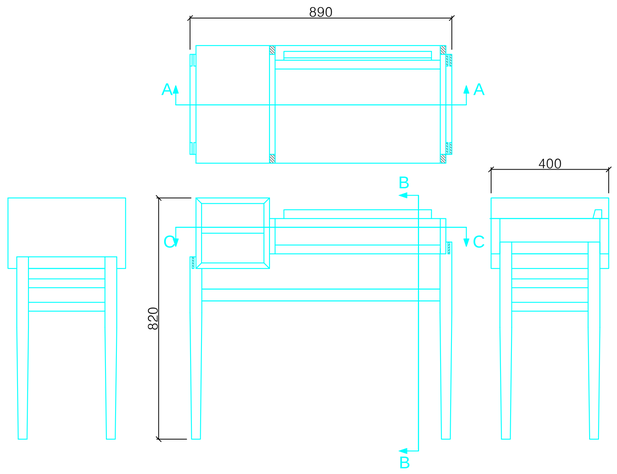

Test Project for the 43rd WorldSkills Competition in S«o Paulo, Brazil 2015.
Copyright Ê 2015 WorldSkills International.
All Rights Reserved.

worldskills international

Skill: 24.Cabinetmaking			
Scale:1:2	Date: 29.06.2013	Paper: A1	
Drawn / Design by: Jang Hol Kim		Drawing No: WSC2015_TP24_KR_EN	
Description:		Rev:	Page: 1 of 1
		Appd:	Sign: